MR. auroras®

THEMIS

Solar Post Top Light






DARKSKY APPROVED

Reduces light pollution
Certified by DarkSky.org



DARKSKY APPROVED
Reduces light pollution
Certified by DarkSky.org

Designed for Nature



THEMIS Dark Sky Friendly

Solar Post Top Light

DARKSKY APPROVED
Reduces light pollution
Certified by DarkSky.org

Introducing the THEMIS solar post top light, offering a new and futuristic design. Developed for our environment to protect native animals from blue-light harm and the unwanted glare of led lights. With a UWLR of <1% of the lighting distribution, the fitting provides an even lighting performance without light pollution. Simply put, THEMIS creates wildlife-friendly lighting for our environment. The combination of a MONO solar panel, and LiFePO4 battery, and a high-charging efficiency 96% MPPT solar charge controller provides an ultra-bright output of 190lm/W with the lowest lighting power setting.

The lighting output power and working period as well as color temperature are client- programmable to ensure the fitting will perform well to your satisfaction. No matter in the middle east with plenty of sunshine or in north Europe with less sunshine, THEMIS is able to perform well with constant lighting brightness and sufficient time. The custom unique programming of THEMIS will ensure stable, continuous illumination through the night through all seasons.

The THEMIS is popular for gardens, parks, walk paths, and bicycle lanes to light up anywhere with the best lighting performance.The designed lifetime is up to 10 years without any maintenance.

Ligting Performance

Item number	**THEMIS	AI-GL590R**
Luminous flux	2,800lm max
Peak LED power	18W
CRI	>80
LED type	SMD2835 84pcs
CCT range	2200K+3000K or 3000K+4000K or 3000K+6000K
LED lifetime	>100,000 hours

LiFePO4 Battery

Battery type	Brand new LifePO4 32700 6000mA 3.2V
Battery capacity	154WH 12.8V
Battery lifetime	6000 cycles @ D.O.D 80%
Charge Time	4 hours
Discharge time	>24 hours
Working temp.	-15℃~ 70℃
Battery autonomy	2 ~ 3 days in energy saving modes

Solar Panel

Peak Power	38W
Rated Voltage	18V
Cell Type	MONO crystallinesilicion
Cell Efficiency (%)	>22.5%
Lifetime	>20 years
Waranty	10 years

Control System

Control method	Automatic dusk to dawn
Solar charge controller	MPPT controller
Charging efficiency	>97%
Remote type	2.4G radio
Operation distance	30 meters
Sensor type	PIR motion sensor
Grouping function	Yes
CCT changeable	Yes
LED power changeable	Yes
Time changeable	Yes
Working mode changeable	Yes

Fixture & Packing

Light dimension	φ590 * H550mm
Materials	Aluminium die casting + tempered glass
IP & IK Rate	IP65 IK10
Fixture color	Black RAL9011 / Anthracite grey RAL 7016
Pole diameter to fit	76mm
Package size	62*62*25cm
N.W/Light	10.60KG
G.W/Light	13.10KG
Certificates	CB CE ROHS IP65 LM79 LM80, MSDS UN3.8
Warranty	5 years

Remark : CCT of 3000 K or lower is required for IDA certification compliance.

Product Feature



Wild animals friendly
without lighting pollution

MATCH

Lights can be grouped
by remote control

2.4G remote signals is
more stable performance

4H / 6H / 12H optional
changeable by remote

Green energy from the sun
never pay electricity bill



Dual CCT is changeable
between two colors.

6000 cycles brand new
LifePO4 battery unit

Sensitive PIR motion
sensor can be ON/OFF

ON - OFF

Dusk to Dawn
automatically ON/OFF



Fixture Dimension (mm)

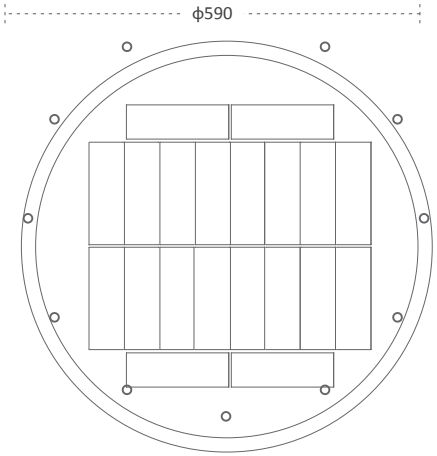

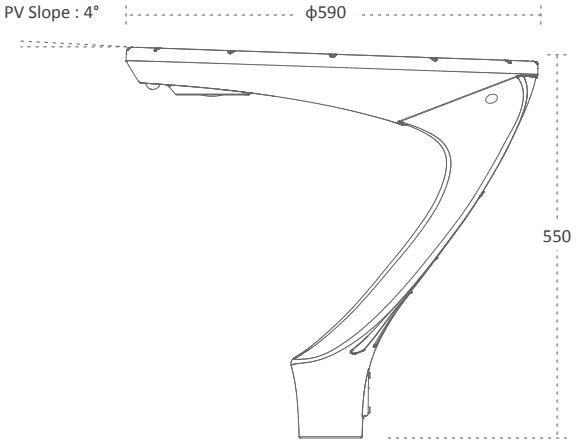

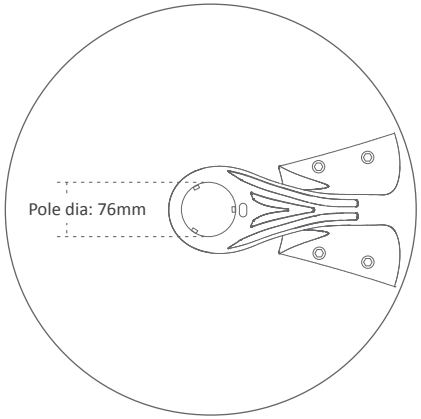

Lighting Performance



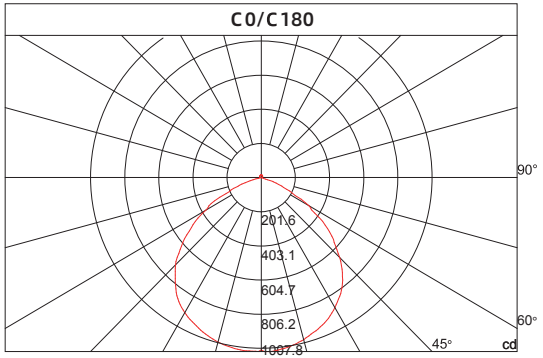

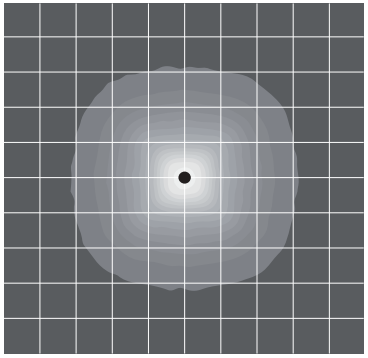

Symetric light distribution.

Assembling & Package

THEMIS adopts a detachable structure design which is is simple and but very strong and reliable, It makes the assembly much simpler while minimizing the packaging volume. The light body and the bracket only need to be fixed together with 4pcs M8 screws, and then push the builtin button, then no other additional operations are required. Simpe is the best.






SØGNE HELSEHUS

DARKSKY APPROVED
Reduces light pollution
Certified by DarkSky.org

THEMIS Dark Sky Friendly

Solar Post Top Light





MR. auroras

Auroras Innotech
(GuangDong) Co., Ltd

Website :
www.auroraslighting.com

Email :
sales.2@auroraslighting.com

WhatsApp :
+86 135 8015 6686

Telephone :
+86 0756-8530887 / 8530371
0760-86687850 / 86687851

Head office : 2/F 617# HuaYu Road, XiangZhou District, Zhuhai, GuangDong, China 519000
Sub-factory : 2/F, B# Bldg,1# Dongcheng road, SanXiang GuangDong CHINA 528463
Saudi factory : Street 59# Alkharj industrial, Alkharj Riyadh , K.S.A

WhatsApp Scan Catalog